DEMOLITION NOTES:

1. CONTRACTOR SHALL SUBMIT BID & BE FULLY FAMILIAR WITH SITE PRIOR TO COMMENCING WORK. ANY ITEM NOT IDENTIFIED SHALL BE BROUGHT TO THE ATTENTION OF THE COUNTY REPRESENTATIVE DURING BID PERIOD.
2. DEMOLITION AND REMOVAL WORK SHALL BE CAREFULLY PERFORMED TO AVOID DAMAGE TO EXISTING TREES NOTED ON THE PLANS AS REMAINING.
3. ALL REMOVAL WORK (EXCEPT AS NOTED) SHALL BE DISPOSED OF OFF-SITE, IN A LEGAL MANNER, AT THE CONTRACTOR'S EXPENSE.
4. CLEAR THE SITE OF GRASS, WEED GROWTH, RUBBISH, DEBRIS, PAVEMENT, CONCRETE, INACTIVE OR ABANDONED FACILITIES (VERIFIED BY THE AGENCY), ETC., THAT ARE TO BE REMOVED FOR CONSTRUCTION OF THE SITE IMPROVEMENTS TO THE LIMITS AND DEPTHS SHOWN ON THE PLANS.
5. ABANDONED UNDERGROUND FACILITIES (VERIFIED BY THE AGENCY), ROOTS THREE INCHES IN DIAMETER AND LARGER, ROCKS AND BROKEN MASONRY LARGER THAN FOUR INCHES IN ANY DIMENSION SHALL BE REMOVED TO A MINIMUM DEPTH OF 12" BELOW FINISH GRADE.
6. MISCELLANEOUS INACTIVE OR ABANDONED UNDERGROUND FACILITIES LOCATED 12 INCHES OR MORE BELOW FINISH GRADE MAY BE REMOVED WITH AGENCY APPROVAL.
7. MISCELLANEOUS ACTIVE LINES WITHIN 12 INCHES OF FINISH GRADE THAT ARE UNCOVERED DURING THE GRADING OPERATIONS SHALL BE PROTECTED.
8. ALL DELETERIOUS MATERIALS WITHIN THE LIMITS OF THE WORK SHALL BE DISPOSED OF OFF SITE BY THE CONTRACTOR, WHO SHALL MAKE ALL NECESSARY ARRANGEMENTS AND PAY ALL RELATED COSTS.
9. ACTIVE UTILITIES SHALL BE PROTECTED BY AND AT THE EXPENSE OF THE CONTRACTOR. KEEP ANY REQUIRED UTILITY IN OPERATING CONDITIONS DURING ENTIRE PERIOD OF WORK, INCLUDING EXISTING IRRIGATION SYSTEMS FOR LANDSCAPE MAINTENANCE.
10. INACTIVE OR ABANDONED UTILITIES SHALL BE DISCONNECTED, REMOVED, AND PLUGGED OR CAPPED SUBJECT TO THE LOCAL GOVERNING ORDINANCES.
11. SHOULD THE CONTRACTOR ENCOUNTER ANY EXISTING UNDERGROUND UTILITIES NOT SHOWN ON THE DRAWINGS, HE SHALL IMMEDIATELY NOTIFY THE AGENCY REPRESENTATIVE WHO WILL DETERMINE FURTHER PROCEDURE.
12. BURNING OF DEBRIS WILL NOT BE PERMITTED EXCEPT BY WRITTEN PERMISSION FROM THE AIR POLLUTION CONTROL AUTHORITIES AND GOVERNING FIRE AUTHORITIES.
13. CONTRACTOR TO REMEDIATE BORINGS AS NECESSARY & RECOMMENDED BY GEOTECHNICAL ENGINEER.

DEMOLITION LEGEND:

1. CLEAR & GRUB ENTIRE SITE WITHIN LIMIT OF WORK.
2. GEOTECHNICAL BORINGS ON SITE. REFER TO GEOTECH. REPORT FOR LOCATION.
3. EXISTING WATER SERVICE, TO REMAIN, PROTECT IN PLACE.
4. EXISTING STREET IMPROVEMENTS, PROTECT IN PLACE.
5. EXISTING TREE. REMOVE ENTIRELY & DISPOSE OF OFF-SITE.
6. CAP & UNDERGROUND EXISTING IRRIGATION IN PARKWAY.
7. EXISTING SERVICE & PAD TO REMAIN. PROTECT IN PLACE.
8. REMOVE CONCRETE ENTIRELY & DISPOSE OF OFFSITE.

NOTE:

1. UNDERGROUND FACILITIES INCLUDING: EXISTING SEWER, WATER, STORM DRAIN, LANDSCAPE PIPING, AND ELECTRICAL WILL REMAIN UNDERGROUND DURING CONSTRUCTION. PROTECT IN PLACE.
2. PROTECT IN PLACE CONDUIT UNDER SIDEWALK ALONG TRUMBLE ROAD TO PARKWAY PLANTERS.

SYMBOLS / ABBREVIATIONS:

L.O.W. LIMIT OF WORK

LIMIT OF WORK LINE

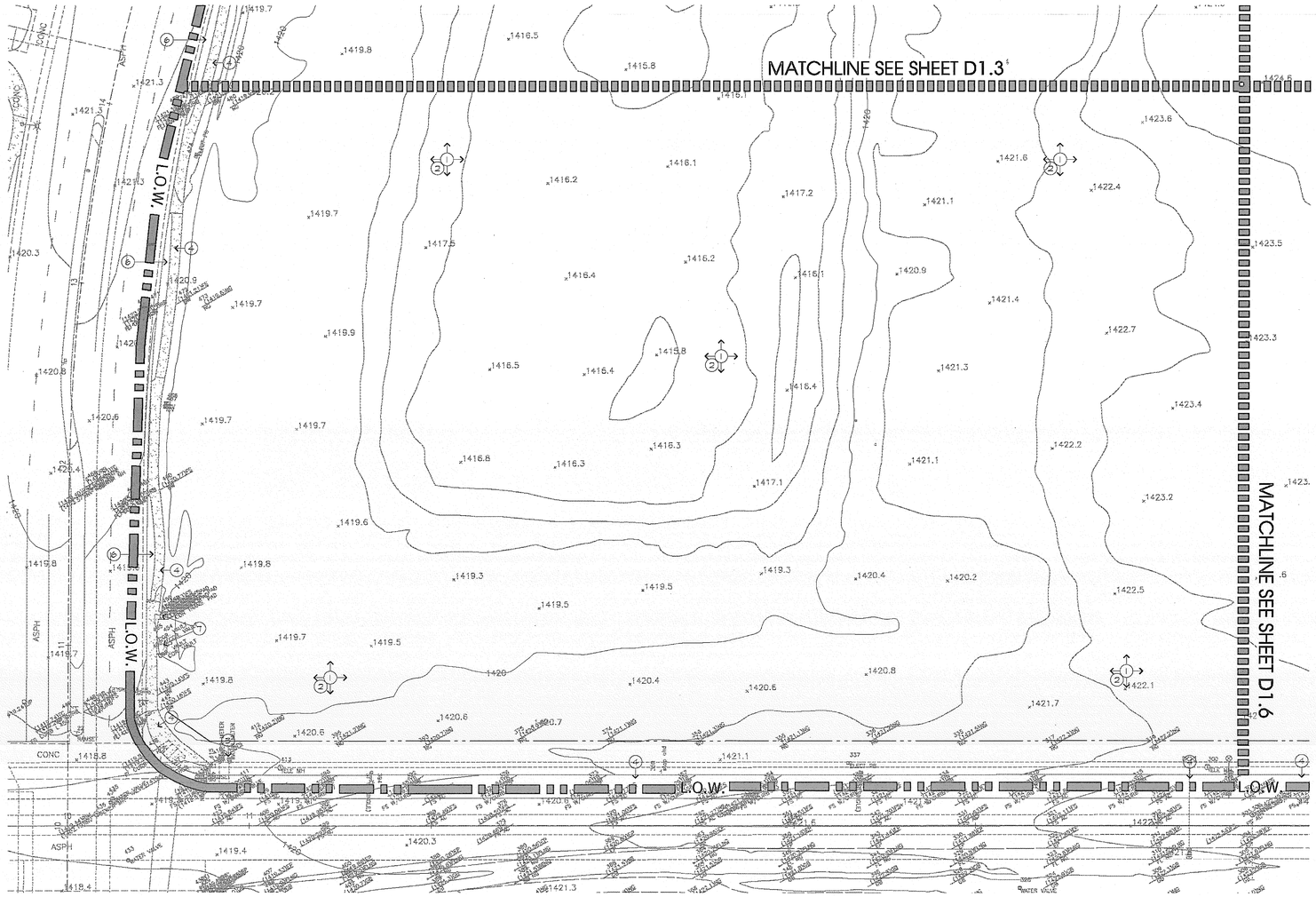

DIGALERT

DIAL TOLL FREE
1-800-422-4133

AT LEAST TWO DAYS BEFORE YOU DIG

UNDERGROUND SERVICE ALERT OF SOUTHERN CALIFORNIA

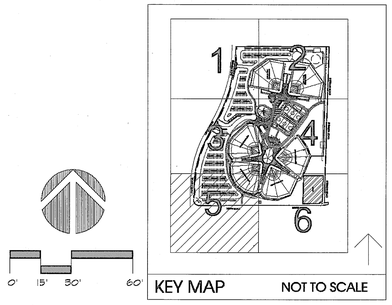

MIG

MOORE IACOFANO GOLTSMAN, INC.

801 N. HARBOR BLVD.
FULLERTON, CA 92832

TEL 714/871-3638
FAX 714/871-1188
www.migcom.com

CONSULTANT:

PROJECT TEAM:

LANDSCAPE ARCHITECT
MIG INC.

ARCHITECT
PITASSI ARCHITECTS INC.

CIVIL ENGINEERS/SURVEYOR
WALDEN & ASSOCIATES

STRUCTURAL ENGINEERS
CORREIA CONSULTING & DESIGN

ELECTRICAL ENGINEERS
LRA ENGINEERS

IRRIGATION DESIGNER
WILLIAMS IRRIGATION DESIGN

GEOTECHNICAL ENGINEERS
CONVERSE CONSULTANTS

TURF GRASS CONSULTANT
GUISE AND ASSOCIATES

PERRIS VALLEY Big League Dreams

2155 Trumble Road
Perris, California, 92570

SHEET TITLE

DEMO PLANS

100% CONSTRUCTION DOCUMENT

DATE	REVISIONS

STAMP

CHECKED BY	DATE
RE	

DATE 01-07-10	FILE NAME
DRAWN BY HD	SHEET D1.5
JOB NO. 05208.00	
SCALE 1"=30'-0"	10 OF 313 SHEETS